Technical Data Sheet

Compressor model **L57TNb**

Voltage **220-240V 50Hz ~1**

Refrigerant **R22**

APPLICATION

Application	High-Medium Back Pressure
Refrigerant	R22
Evaporating Temp.	-25,0 ºC to 10,0 ºC
Expansion	Capillar/Valve
Comp. Cooling	Fan cooled
Max. ambient temp.	43,0 ºC

COMPRESSOR

Displacement	5,68 cm³
Diameter	22,00 mm
Stroke	14,92 mm
Net Weight	9,50 Kg
Oil type	ISO VG 46 MINER
Oil charge	300 cm³

MOTOR

Nominal Power	1/5 hp
Voltage/Frequency	220-240V 50Hz
Voltage range	187-264 V
Type	CSIR
Phase number	1 PH
Locked Rotor Amps (LRA)	12,00 A
Max. Cont. Current (MCC)	3,00 A
Main W. resist. at 25ºC	7,70 Ω
Start W. resist. at 25ºC	35,48 Ω

NOMINAL PERFORMANCE

	ASHRAE	CECOMAF
Cooling Capacity	615 kCal/h	611 W
COP	1,93 W/W	1,71 W/W
EER	1,66 kCal/Wh	1,48 kCal/Wh
Input Power	370 W	358 W
Current	2,00 A	1,95 A

APPROVALS

TEST CYCLE CONDITIONS

	ASHRAE	**CECOMAF**
	HMBP (D)	**HMBP (C)**
Evaporating temp. (T_e)	7,2 ºC	5,0 ºC
Condensing temp. (T_c)	55,0 ºC	55,0 ºC
Liquid temp. ($T_{liq.}$)	46,0 ºC	55,0 ºC
Ambient temp. ($T_{amb.}$)	35,0 ºC	32,0 ºC
Suction temp. ($T_{suction}$)	35,0 ºC	32,0 ºC
Voltage/Frequency	220 V 50 Hz	220 V 50 Hz

ELECTRICAL COMPONENTS

Starting capacitor	47- 56 µF 330 V			
Relay	Option 1			
Reference	2014 131.			
Pick-Up	5,30 A			
Drop-Out	4,50 A			
Protector	Option 1	Option 2		
Reference	MRT38AMK	T0168		
Current	10,00 A	9,50 A		
Time check	7,5-14 seg	7,5-14 seg		
Disc temp. (Open/Close)	105,00 / 61,00 ºC	105,00 / 61,00 ºC		

Technical Data Sheet

cubigel compressors

ASHRAE

Tc °C	Te °C	Cooling Capacity kCal/h	Consumption W	Current A	COP W/W	EER kCal/Wh
40	-25	181	177	1,30	1,19	1,02
40	-20	244	191	1,35	1,48	1,28
40	-15	318	207	1,41	1,78	1,53
40	-10	402	225	1,47	2,08	1,79
40	-5	497	243	1,53	2,37	2,04
40	0	602	264	1,61	2,66	2,29
40	5	718	285	1,68	2,93	2,52
40	7,2	773	295	1,72	3,05	2,62
40	10	845	308	1,77	3,19	2,74
45	-25	165	178	1,31	1,08	0,93
45	-20	223	196	1,37	1,32	1,13
45	-15	291	216	1,44	1,57	1,35
45	-10	369	237	1,51	1,81	1,56
45	-5	459	260	1,59	2,06	1,77
45	0	558	283	1,68	2,29	1,97
45	5	668	308	1,77	2,52	2,17
45	7,2	720	320	1,81	2,62	2,25
45	10	789	335	1,87	2,74	2,35
50	-25	150	180	1,31	0,97	0,83
50	-20	201	201	1,39	1,16	1,00
50	-15	264	225	1,47	1,36	1,17
50	-10	337	250	1,56	1,57	1,35
50	-5	420	276	1,65	1,77	1,52
50	0	514	303	1,75	1,97	1,70
50	5	618	332	1,86	2,17	1,86
50	7,2	668	345	1,90	2,25	1,93
50	10	733	362	1,97	2,35	2,02
55	-25	134	181	1,32	0,86	0,74
55	-20	180	207	1,41	1,01	0,87
55	-15	237	234	1,50	1,18	1,01
55	-10	304	262	1,60	1,35	1,16
55	-5	382	292	1,71	1,52	1,31
55	0	470	323	1,82	1,69	1,46
55	5	568	355	1,94	1,86	1,60
55	7,2	615	370	2,00	1,93	1,66
55	10	677	389	2,07	2,02	1,74

CECOMAF

Tc °C	Te °C	Cooling Capacity W	Consumption W	Current A	COP W/W	EER kCal/Wh
40	-25	197	177	1,31	1,11	0,96
40	-20	267	192	1,36	1,39	1,20
40	-15	348	208	1,41	1,67	1,44
40	-10	440	226	1,47	1,95	1,68
40	-5	544	245	1,54	2,22	1,92
40	0	659	265	1,61	2,48	2,15
40	5	785	287	1,69	2,73	2,36
40	7,2	844	297	1,73	2,84	2,45
40	10	922	310	1,77	2,97	2,57
45	-25	180	179	1,31	1,00	0,87
45	-20	243	197	1,38	1,23	1,06
45	-15	317	217	1,44	1,46	1,26
45	-10	403	238	1,52	1,69	1,46
45	-5	500	261	1,60	1,91	1,65
45	0	608	285	1,68	2,13	1,84
45	5	727	311	1,78	2,34	2,02
45	7,2	783	322	1,82	2,43	2,10
45	10	857	337	1,88	2,54	2,20
50	-25	162	180	1,32	0,90	0,78
50	-20	218	203	1,39	1,08	0,93
50	-15	286	226	1,47	1,27	1,09
50	-10	365	251	1,56	1,45	1,26
50	-5	455	277	1,65	1,64	1,42
50	0	556	305	1,76	1,82	1,58
50	5	669	334	1,86	2,00	1,73
50	7,2	722	347	1,91	2,08	1,80
50	10	793	365	1,98	2,17	1,88
55	-25	144	182	1,32	0,79	0,69
55	-20	194	208	1,41	0,93	0,81
55	-15	255	235	1,50	1,09	0,94
55	-10	327	264	1,61	1,24	1,07
55	-5	411	293	1,71	1,40	1,21
55	0	505	325	1,83	1,56	1,34
55	5	611	358	1,95	1,71	1,48
55	7,2	661	372	2,01	1,78	1,53
55	10	728	392	2,08	1,86	1,61

EN12900

X	Cooling Capacity (W)	Consumption (W)	Current (A)	Mass Flow (kg/h)
1	1.081,6445302075	108,6988457918	1,0070308035	18,748254542669
2	35,3268711398	-1,6463762045	-0,0069257427	0,66284285051521
3	-10,5126054765	4,0917754044	0,0155673865	-0,11944059045331
4	0,2263612069	0,0308814661	0,0001600365	0,0061627650836513
5	-0,2775316517	0,1513311377	0,0005812293	-0,0028274288384156

Equation	$x_1 + x_2Te + x_3Tc + x_4Te^2 + x_5TeTc$

COMPRESSOR DIMENSIONS

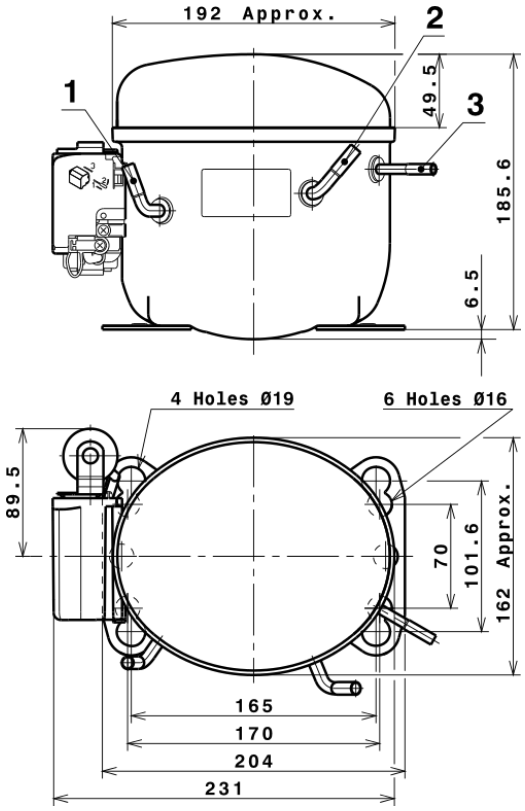

	DESIGNATION	INTERNAL DIAM.
1	Suction	6,5 mm
2	Service	6,5 mm
3	Discharge	4,9 mm

WIRING DIAGRAMS AND ELECTRICAL ASSEMBLY

CSIR CONNECTION (L, P ranges)

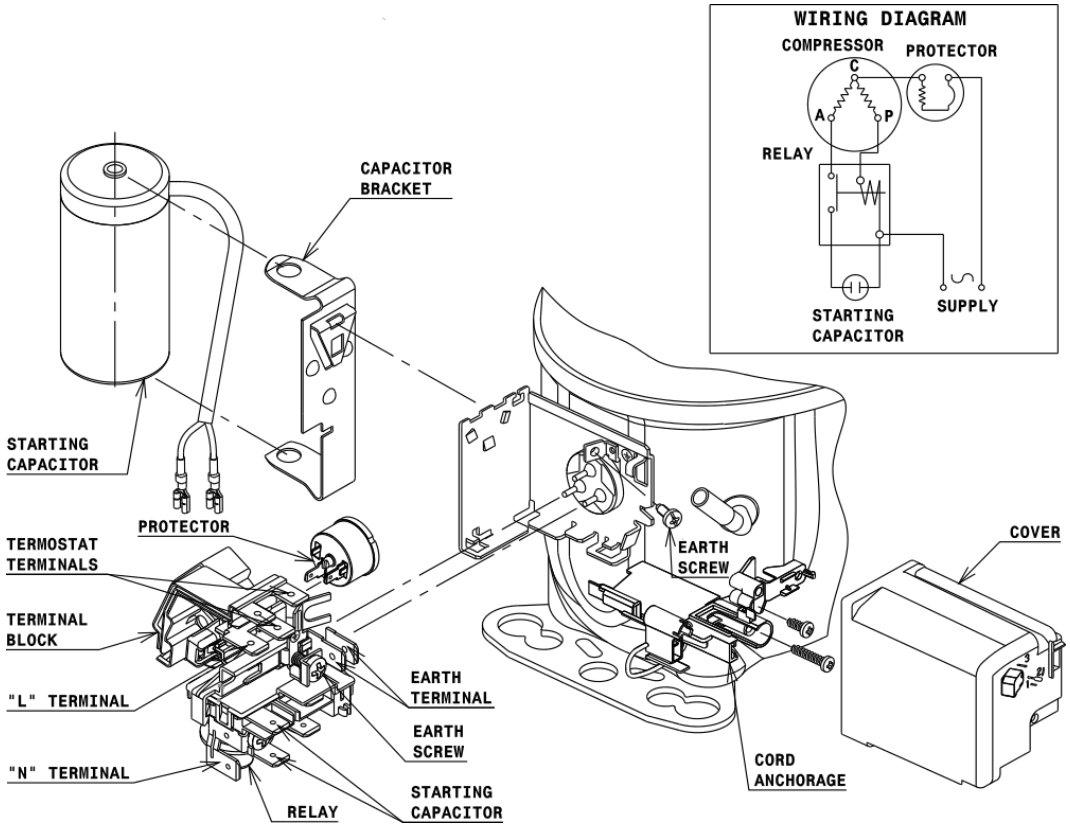

FIXINGS

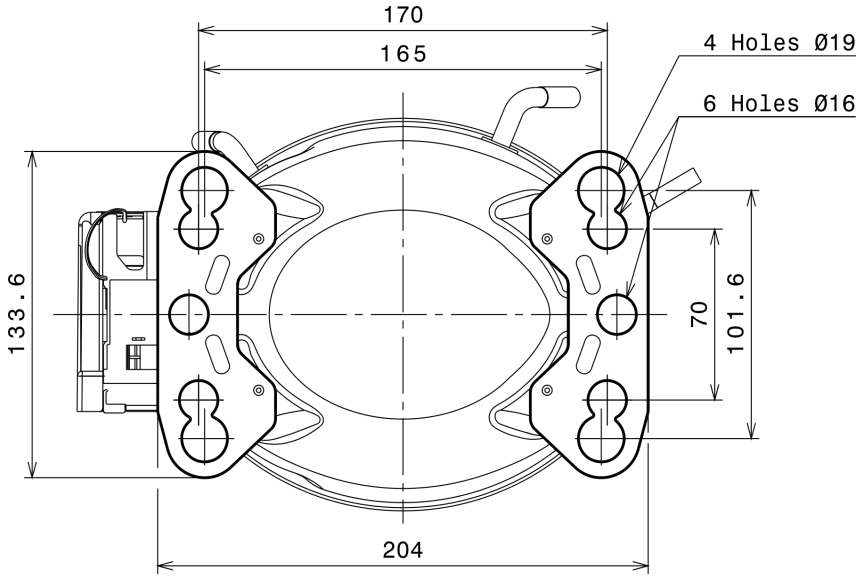

SILENT BLOCKS (MOUNTING ACCESSORIES)

STANDARD

Ø16 holes (170x70 net)

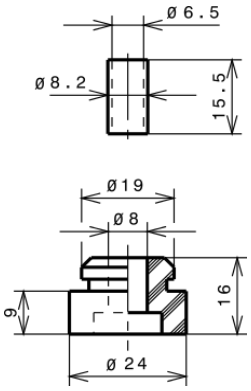

AMERICAN FEET

Ø19 holes (165x101.6 net)

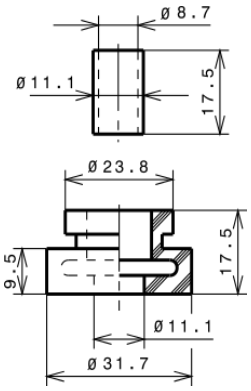

SNAP-ON

Ø16 holes (170x70 net)

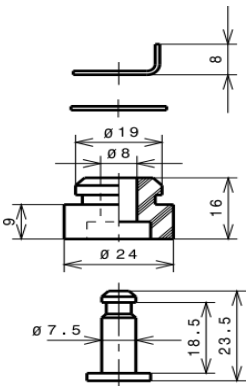

SOA
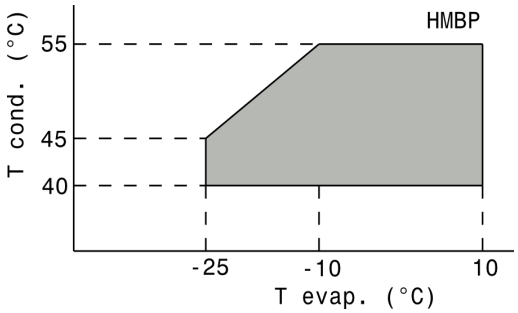
SOA R22 HMBP